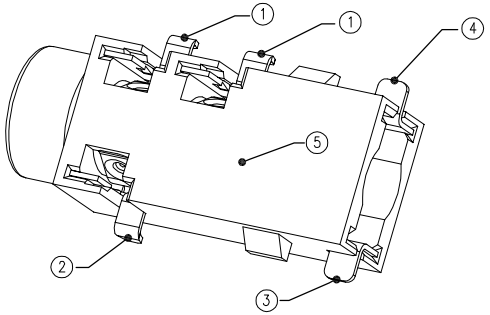

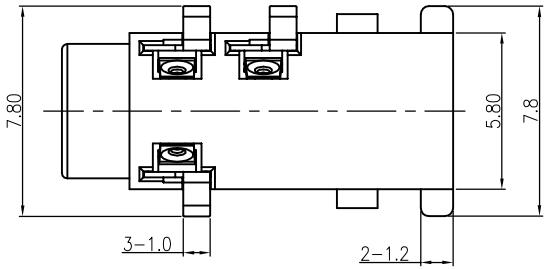

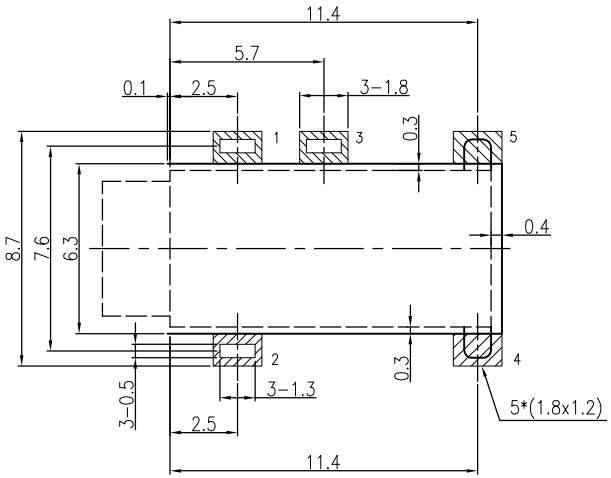

PCB LAYOUT TOP VIEW

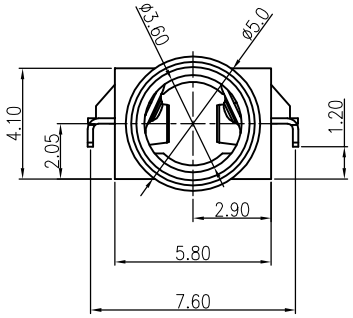

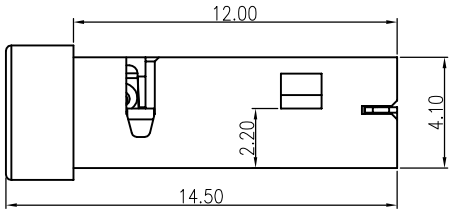

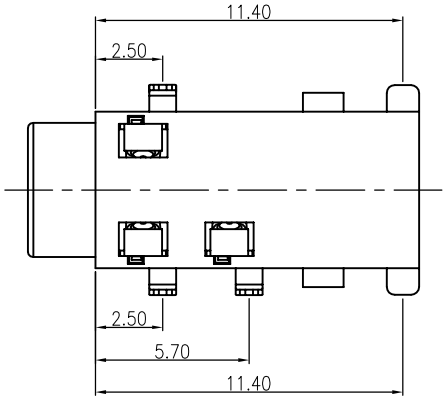

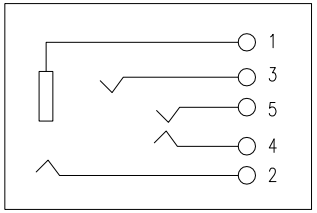

CIRCUIT DIAGRAM

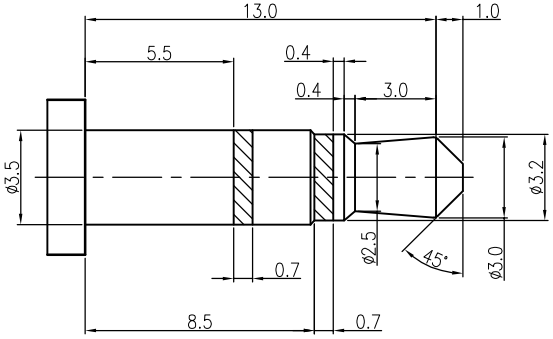

MATE PLUG

No.	PART NAME	QTY	MATERIAL	FINISHING
⑤	HOUSING	1	PA9T	Black
④	TERMINAL	1	PHOSPHOR BRONZE T=0.20	Ag-Plated
③	TERMINAL	1	PHOSPHOR BRONZE T=0.20	Ag-Plated
②	TERMINAL	1	PHOSPHOR BRONZE T=0.20	Ag-Plated
①	TERMINAL	2	PHOSPHOR BRONZE T=0.20	Ag-Plated

UNITS: mm	
GENERAL TOLERANCE	
X.° ±5°	0.X±0.25
X.1±2°	0.XX±0.2
XX.±1°	0.XXX±0.1

CSCONN

CSCONN PRECISE ELECTRONICS CO.,LTD

PART NO.(INTENDED USE): CPJ3547

TITLE: PHONE JACK

APPD:

DWG NO. JACK

CHKD: Skila

DR: Kitty

SCALE	SHEET	REV
1:1	1 OF 1	A